PRODUCT DATA SHEET

2026-11-23

Article number:

4107650411GS

Swivel castor 75 mm, TPU-tyre

Swivel bracket. Made of zinc-chromatized pressed sheet metal with double ball race swivel. Center hole fitting. Riveted wheel axle. Wheel with grey TPU-tyre. Hub made of black PP. Plain bearing.



Image may differ from the actual product.*

DIMENSIONS

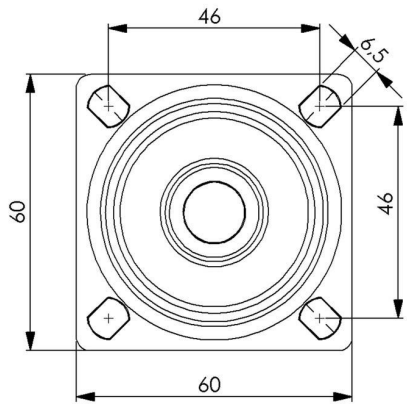

SPECIFICATIONS

Diameter	75 mm
Totalt height	99 mm
Load Capacity (dynamic)	55 kg
Castor model	Swivel
Fitting	Top plate
Material Tread	Polyurethane
Bearing	Plain bearing
Plate Size	60x60 mm
CC Distance	46x46 mm
Thread hardness (Shore°)	98° Shore A
Width of tread	24 mm
Material Hub	Polypropylen (pp)
Top Hole	8,5x6,5 mm
Color Tread	Grey
Offset	35 mm
Material Thickness Bracket	2 mm
Materialthickplate	2 mm
Swivel radius	72,5 mm
Product Weight	0,3 kg
Temperature Range	-20°C to +50°C

Numeric values in the technical specification may be nominal/rounded to the nearest standard dimension. To see exact values, please refer to the drawing.