PRODUCT DATA SHEET

2026-11-23

Article number:

5C16680932GG

Swivel castor 160 mm, elastic rubber-tyre

Swivel bracket. Made of zinc-chromatized pressed sheet metal with double ball race swivel. Top plate fitting. Wheel axle with nut. Wheel with grey elastic rubber-tyre. Hub made of grey Nylon/PA6 with threadguards. Double Ball bearing.



Image may differ from the actual product.*

DIMENSIONS

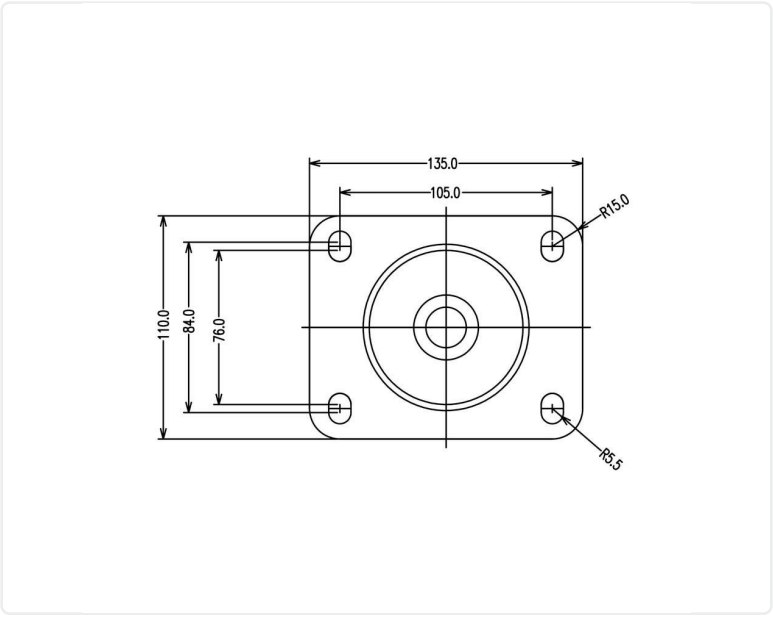

SPECIFICATIONS

Diameter	160 mm
Totalt height	196 mm
Load Capacity (dynamic)	350 kg
Castor model	Swivel
Fitting	Top plate
Material Tread	Elastic Rubber
Bearing	Double Ball bearing
Plate Size	140x110 mm
CC Distance	105x80 mm
Thread hardness (Shore°)	75° Shore A
Width of tread	45 mm
Material Hub	Nylon PA6
Top Hole	11 mm
Color Tread	Grey
Offset	51 mm
Material Thickness Bracket	3.5 mm
Materialthickplate	4 mm
Product Weight	2.33 kg
Temperature Range	-20°C to +70°C

Numeric values in the technical specification may be nominal/rounded to the nearest standard dimension. To see exact values, please refer to the drawing.