PRODUCT DATA SHEET

2026-11-24

Article number:

5810660933GZ-ALU

Swivel castor 100 mm, elastic rubber-tyre

Swivel bracket. Made of zinc-chromatized pressed sheet metal with double ball race swivel. Top plate fitting. Wheel axle with nut. Wheel with grey elastic rubber-tyre. Hub made of aluminium. Double Ball bearing.



Image may differ from the actual product.*

DIMENSIONS

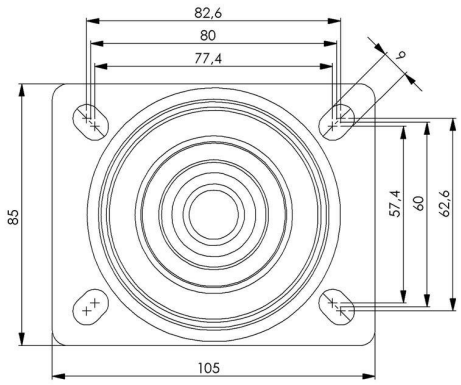

SPECIFICATIONS

Diameter	100 mm
Totalt height	132 mm
Load Capacity (dynamic)	225 kg
Castor model	Swivel
Fitting	Top plate
Material Tread	Elastic Rubber
Bearing	Double Ball bearing
Plate Size	105x85 mm
CC Distance	80x60 mm
Thread hardness (Shore°)	85° Shore A
Width of tread	40 mm
Material Hub	Aluminium
Top Hole	12,5x9 mm
Color Tread	Grey
Offset	41 mm
Material Thickness Bracket	2.5 mm
Materialthickplate	3 mm
Product Weight	1.27 kg
Temperature Range	-20°C to +70°C

Numeric values in the technical specification may be nominal/rounded to the nearest standard dimension. To see exact values, please refer to the drawing.