PRODUCT DATA SHEET

2026-11-24

Article number:

471267BT

Braked bracket 125 mm, Total stop brake

Swivel bracket with total stop brake. Made of zinc-chromatized pressed sheet metal with double ball race swivel. Top plate fitting.



Image may differ from the actual product.*

DIMENSIONS

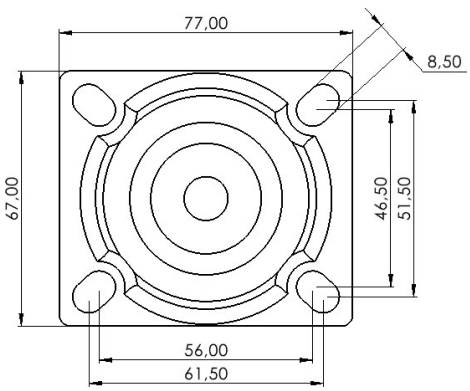

SPECIFICATIONS

Diameter	125 mm
Totalt height	160 mm
Load Capacity (dynamic)	100 kg
Castor model	Brake
Fitting	Top plate
Plate Size	77x67 mm
CC Distance	59x49 mm
Brake	Total brake
Hub Hole Diameter	8 mm
Top Hole	12x8,5 mm
Castor Housing	Yes
Fork Width	37 mm
Offset	39 mm
Material Thickness Bracket	2.5 mm
Materialthickplate	2.5 mm
Product Weight	0.55 kg
Temperature Range	-20°C to +50°C

Numeric values in the technical specification may be nominal/rounded to the nearest standard dimension. To see exact values, please refer to the drawing.